TW-R30-M-K2
HF Tag

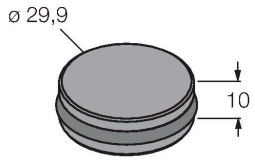

Technical data

Type	TW-R30-M-K2
ID	7030206
Remark to product	For direct mounting on and in metal
Data transfer	Inductive coupling
Technology	HF RFID
Operating frequency	13.56 MHz
Memory type	FRAM
Chip	Fujitsu MB89R118
Memory	2048 Byte
Memory	Read/Write
Freely usable memory	2000 Byte
Number of read operations	unlimited
Number of write operations	10^{10}
Typical read time	0.5 ms/Byte
Typical write time	0.5 ms/Byte
Radio communication and protocol standards	ISO 15693 NFC Typ 5
Minimum distance to metal	0 mm
Temperature during read/write access	-25…+85 °C
Temperature outside detection range	-40…+85 °C
	140 °C, 1 × 100 h
Design	Hard tag, R30
Diameter	30 mm
Housing material	Plastic, PET
Active area material	Plastic, PET, black
Protection class	IP68
Packaging unit	1

Features

- 3 different mounting options in/on metal, incl. accessories
- FRAM memory 2 kB
- For direct mounting on and in metal

Functional principle

The HF read/write devices operating at a frequency of 13.56 MHz form a transmission zone the size of which (0…500 mm) varies, depending on the combination of read/write head and tag used.
The read/write distances mentioned here only represent standard values measured under laboratory conditions, free from any influences caused by surrounding materials.
The read/write distances of tags suitable for mounting in/on metal were determined in/on metal.
Attainable distances may vary by up to 30 % due to component tolerances, mounting conditions, ambient conditions and material qualities (especially when mounted in metal). Testing of the application under real operating conditions is therefore essential, especially with on-the-fly reading and writing!

TW-R30-M-K2| 29-07-2024 11-44 | Technical modifications reserved

Mounting instructions/Description

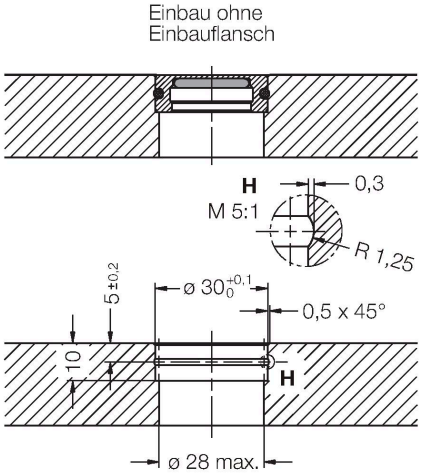

These data carriers can be mounted in 3 different ways:
1. Directly potted or glued in metal (without O-ring)
2. Installed in metal with O-ring (fixed with 2 screws)
3. Mounted upside down on metal (fixed with 2 screws)

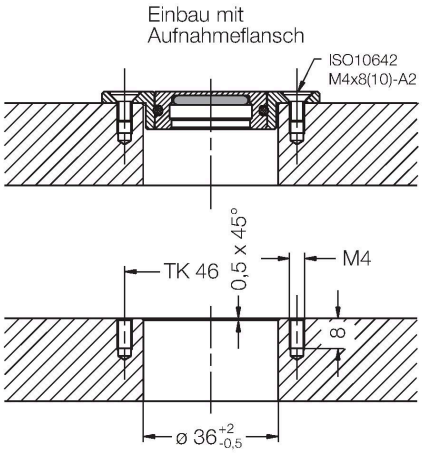

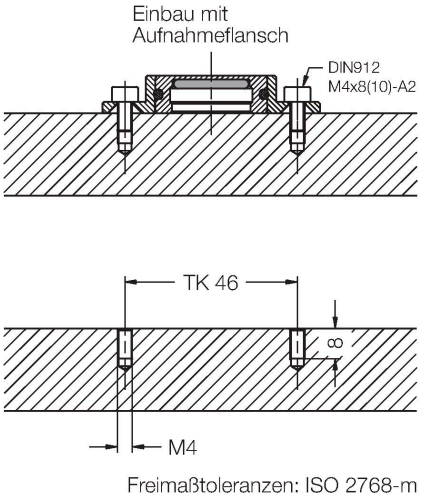

Freimaßtoleranzen: ISO 2768-m

TW-R30-M-K2| 29-07-2024 11-44 | Technical modifications reserved

Accessories

MF-R30	6901150
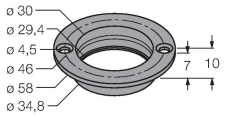	The flange facilitates mounting of the tag TW-R30-M-B128 (-K2) on or in the metal.

TW-R30-M-K2| 29-07-2024 11-44 | Technical modifications reserved